GEN-2016-153 & GEN-2017-086

MODIFICATION REQUEST IMPACT STUDY

By SPP Generator Interconnection

Published on September 1, 2023

REVISION HISTORY

DATE OR VERSION NUMBER	AUTHOR	CHANGE DESCRIPTION	COMMENTS
8/25/2023	SPP Staff	Original Version	
9/1/2023	SPP Staff	Update Capacity Statements	State that GEN-2017-086 capacity exceeds Interconnection Service amount throughout report.

CONTENTS

REVISION HISTORY I
EXECUTIVE SUMMARY 2
SCOPE OF STUDY 6
PowerFlow Analysis 6
Stability Analysis, Short Circuit Analysis 6
Charging Current Compensation Analysis 6
Study Limitations 7
PROJECT AND MODIFICATION REQUEST 8
EXISTING VERSUS MODIFICATION COMPARISON 12
Stability Model Parameters Comparison 12
Equivalent Impedance Comparison Calculation 12
CHARGING CURRENT COMPENSATION ANALYSIS 13
Methodology and Criteria 13
Results 13
SHORT CIRCUIT ANALYSIS 16
Methodology 16
Results 16
DYNAMIC STABILITY ANALYSIS 18
Methodology and Criteria 18
Fault Definitions 19
Results 27
MODIFIED CAPACITY EXCEEDS GIA CAPACITY 31
Results 31
MATERIAL MODIFICATION DETERMINATION 32
Results 32

LIST OF TABLES

Table ES-1: GEN-2016-153 and GEN-2017-086 Existing Configuration 2
Table ES-2: GEN-2016-153 and GEN-2017-086 Modification Request 3
Table 2-1: GEN-2016-153 and GEN-2017-086 Existing Configuration 8
Table 2-2: GEN-2016-153 and GEN-2017-086 Modification Request 11
Table 4-1: Shunt Reactor Size for Reduced Generation Study (Modification) 14
Table 5-1: Short Circuit Model Parameters* 16
Table 5-2: POI Short Circuit Results 17
Table 5-3: 25SP Short Circuit Results 17
Table 6-1: Fault Definitions 19
Table 6-2: GEN-2016-153 and GEN-2017-086 Dynamic Stability Results 27

LIST OF FIGURES

Figure 2-1: GEN-2016-153 and GEN-2017-086 Single Line Diagram (Existing Configuration) 9
Figure 2-2: GEN-2016-153 and GEN-2017-086 Single Line Diagram (Modification Configuration) 10
Figure 4-1: GEN-2016-153 Single Line Diagram w/ Charging Current Compensation (Modification) 14
Figure 4-2: GEN-2017-086 Single Line Diagram w/ Charging Current Compensation (Modification) 15

APPENDICES

APPENDIX A: GEN-2016-153 and GEN-2017-086 Generator Dynamic Model
APPENDIX B: Short Circuit Results
APPENDIX C: Dynamic Stability Results with Existing Base Case Issues & Simulation Plots

EXECUTIVE SUMMARY

Southwest Power Pool performed a Modification Request Impact Study (Study) for GEN-2016-153 and GEN-2017-086, active Generation Interconnection Requests (GIR) with a Point of Interconnection (POI) at the Viola 345 kV Substation.

The GEN-2016-153 and GEN-2017-086 projects interconnect in the Westar Energy (WR) control area with a capacity of 134 MW and 150 MW, respectively, as shown in Table ES-1 below. This Study has been requested to evaluate the modifications of GEN-2016-153 and GEN-2017-086 to change the turbine configurations to 30 x Vestas 4.5 MW (135 MW) and 34 x Vestas 4.5 MW (153 MW), respectively. The inverters are rated at 4.5 MW, and use a power plant controller (PPC) to limit the total power injected into the POI. The generating capacity for GEN-2016-153 (135 MW) and GEN-2017-086 (153 MW) both exceed their respective Generator Interconnection Agreement (GIA) Interconnection Service amounts (134 MW and 153 MW) as listed in Appendix A of the GIAs. As a result, the customer must ensure that the amount of power injected from each request at the POI does not exceed the Interconnection Service amount listed in each GIA. In addition, the modification request included changes to the collection system, generator step-up transformer, generation interconnection line, main substation transformer, and reactive power devices. The existing and modified configurations for GEN-2016-153 and GEN-2017-086 are shown in Table ES-2.

Table ES-1: GEN-2016-153 and GEN-2017-086 Existing Configuration

REQUEST	POINT OF INTERCONNECTION	EXISTING GENERATOR CONFIGURATION	GIA CAPACITY (MW)
GEN-2016-153	Viola 345kV (532798)	67 x 2.0 MW Vestas Wind Turbines	134
GEN-2017-086		75 x 2.0 MW Vestas Wind Turbines	150

Table ES-2: GEN-2016-153 and GEN-2017-086 Modification Request

Facility	Existing Generating Facility Configuration			Modification Generating Facility Configuration	
	GEN-2016-153	GEN-2017-086		GEN-2016-153	GEN-2017-086
Point of Interconnection	Viola 345 kV Substation (532798)			Viola 345 kV Substation (532798)	
Configuration/Capacity	67 x 2.0 MW Vestas Wind Turbines = 134 MW	75 x 2.0 MW Vestas Wind Turbines = 150 MW		30 x Vestas 4.5 MW Wind Turbines = 135.0 MW	34 x Vestas 4.5 MW Wind Turbines = 153.0 MW
Generation Interconnection Line	Length = 23.9 miles			Length = 19.8 miles	
	R = 0.0119 pu			R = 0.00985801 pu	
	X = 0.014413 pu			X = 0.011943478 pu	
	B = 0.167863 pu			B = 0.139145547 pu	
Main Substation Transformer	R = 0.004574 pu	R = 0.005045 pu		R = 0.0023895 pu	R = 0.0023895 pu
	X = 0.097893 pu	X = 0.097339 pu		X = 0.0979695 pu	X = 0.0979695 pu
	Winding MVA = 84 MVA	Winding MVA = 112 MVA		Winding MVA = 113 MVA	Winding MVA = 113 MVA
	Rating MVA = 140 MVA	Rating MVA = 187 MVA		Rating MVA = 189 MVA	Rating MVA = 189 MVA
Equivalent Collector Line	R = 0.0000 pu	R = 0.0000 pu		R = 0.00713 pu	R = 0.006116 pu
	X = 0.0001 pu	X = 0.0001 pu		X = 0.012921 pu	X = 0.010599 pu
	B = 0.0000 pu	B = 0.0000 pu		B = 0.077845 pu	B = 0.079923 pu
GSU Transformer	Gen Equivalent Qty: 67	Gen Equivalent Qty = 65	Gen Equivalent Qty = 10	Gen Equivalent Qty: 30	Gen Equivalent Qty: 34
	R = 0.008868 pu	R = 0.008953 pu	R = 0.008868 pu	R = 0.0080029 pu	R = 0.0080029 pu
	X = 0.089562 pu	X = 0.097590 pu	X = 0.089562 pu	X = 0.0986758 pu	X = 0.0986758 pu
	Winding MVA = 140.7 MVA	Winding MVA = 149.5 MVA	Winding MVA = 21 MVA	Winding MVA = 159 MVA	Winding MVA = 180.2 MVA
	Rating MVA = 140.7 MVA	Rating MVA = 149.5 MVA	Rating MVA = 21 MVA	Rating MVA = 159 MVA	Rating MVA = 180.2 MVA
Generator Dynamic Model and Power Factor	REGCA1 Leading and Lagging = ±0.93	REGCA1 Leading and Lagging = ±0.93	REGCA1 Leading and Lagging = ±0.93	CP220961102 Leading = 0.926 Lagging = 0.87	CP220961102 Leading = 0.926 Lagging = 0.87
Reactive Power Devices	N/A			N/A	

SPP determined that powerflow should not be performed because the technology type of the request was unchanged. However, SPP determined that the change in turbine model from Vestas 2.0 MW wind turbines to Vestas 4.5 MW wind turbines required short circuit and dynamic stability analyses.

The scope of this modification request study included charging current compensation analysis, short circuit analysis, and dynamic stability analysis.

SPP performed the analyses using the modification request data based on the DISIS-2017-002 study models:

1. 2025 Summer Peak (25SP),
2. 2025 Winter Peak (25WP)

All analyses were performed using the Siemens PTI PSS/E[1] version 34 software and the results are summarized below.

The results of the charging current compensation analysis using the 25SP models showed that the GEN-2016-153 project needed a 21.9 MVAr shunt reactor and the GEN-2017-086 project needed a 22.1 MVAr shunt reactor on the 34.5 kV bus of the respective project substations with the modifications in place. This is necessary to offset the capacitive effect on the transmission network caused by the project's transmission line and collector system during reduced generation conditions. The information gathered from the charging current compensation analysis is provided as information to the Interconnection Customer and Transmission Owner (TO) and/or Transmission Operator. The applicable reactive power requirements will be further reviewed by the Transmission Owner and/or Transmission Operator.

The short circuit analysis was performed using the 25SP stability model modified for short circuit analysis. The results from the short circuit analysis with the updated topology showed that the maximum GEN-2016-153 and GEN-2017-086 contribution to three-phase fault currents in the immediate transmission systems at or near the GEN-2016-153 and GEN-2017-086 POI was no greater than 0.326 kA. All three-phase fault current levels within 5 buses of the POI with the GEN-2016-153 and GEN-2017-086 generator online were below 40 kA.

The dynamic stability analysis was performed using Siemens PTI PSS/E version 34.8.0 software for the two modified study models: 25SP and 25WP. Sixty-nine events were simulated, which included three-phase faults and single-line-to-ground stuck breaker faults.

The results of the dynamic stability analysis showed that there were several existing base case issues found in the original DISIS-2017-002 case and the case with the GEN-2016-153 and GEN-2017-086 modification. These issues were not attributed to the GEN-2016-153 and GEN-2017-086 modification request and detailed in Appendix D.

There were no damping or voltage recovery violations attributed to the GEN-2016-153 and GEN-2017-086 modification request observed during the simulated faults. Additionally, the project was found to stay connected during the contingencies that were studied and, therefore, will meet the Low Voltage Ride Through (LVRT) requirements of FERC Order #661A.

The requested modification has been determined by SPP to **not be a Material Modification**. The requested modification does not have a material adverse impact on the cost or timing of any other Interconnection Request with a later Queue priority date. As the requested modification places the generating capacity of each Interconnection Requests at a higher amount than the respective Interconnection Service, the customer must install monitoring and control equipment as needed to ensure that the amount of power injected at the POI from each request does not exceed the Interconnection Service amount listed in the respective GIA.

[1] Power System Simulator for Engineering

In accordance with FERC Order No. 827, the generating facility will be required to provide dynamic reactive power within the range of 0.95 leading to 0.95 lagging at the high-side of the generator substation.

It is likely that the customer may be required to reduce its generation output to 0 MW in real-time, also known as curtailment, under certain system conditions to allow system operators to maintain the reliability of the transmission network.

Nothing in this study should be construed as a guarantee of transmission service or delivery rights. If the customer wishes to obtain deliverability to final customers, a separate request for transmission service must be requested on Southwest Power Pool's OASIS by the customer.

SCOPE OF STUDY

Southwest Power Pool (SPP) performed a Modification Request Impact Study (Study) for GEN-2016-153 and GEN-2017-086. A Modification Request Impact Study is a generation interconnection study performed to evaluate the impacts of modifying the DISIS study assumptions. The determination of the required scope of the study is dependent upon the specific modification requested and how it may impact the results of the DISIS study. Impacting the DISIS results could potentially affect the cost or timing of any Interconnection Request with a later Queue priority date, deeming the requested modification a Material Modification. The criteria sections below include reasoning as to why an analysis was either included or excluded from the scope of study.

All analyses were performed using the Siemens PTI PSS/E version 34 software. The results of each analysis are presented in the following sections.

POWERFLOW ANALYSIS

SPP determined that powerflow should not be performed because the technology type of the request was unchanged with the modification.

STABILITY ANALYSIS, SHORT CIRCUIT ANALYSIS

To determine whether stability and short circuit analyses are required, SPP evaluates the difference between the stability model parameters and, if needed, the equivalent collector system impedance between the existing configuration and the requested modification. Dynamic stability analysis and short circuit analysis would be required if the differences listed above were determined to have a significant impact on the most recently performed DISIS stability analysis.

CHARGING CURRENT COMPENSATION ANALYSIS

SPP requires that a charging current compensation analysis be performed on the requested modification configuration as it is a non-synchronous resource. The charging current compensation analysis determines the capacitive effect at the POI caused by the project's collector system and transmission line's capacitance. A shunt reactor size is determined in order to offset the capacitive effect and maintain zero (0) MVAr flow at the POI while the project's generators and capacitors are offline.

STUDY LIMITATIONS

The assessments and conclusions provided in this report are based on assumptions and information provided to SPP by others. While the assumptions and information provided may be appropriate for the purposes of this report, SPP does not guarantee that those conditions assumed will occur. In addition, SPP did not independently verify the accuracy or completeness of the information provided. As such, the conclusions and results presented in this report may vary depending on the extent to which actual future conditions differ from the assumptions made or information used herein.

PROJECT AND MODIFICATION REQUEST

The GEN-2016-153 and GEN-2017-086 Interconnection Customer has requested a modification to its Interconnection Requests (IR) with a Point of Interconnection (POI) of Viola 345kV. At the time of report posting, GEN-2016-153 and GEN-2017-086 are active Interconnection Requests with a queue status of "IA FULLY EXECUTED/ON SCHEDULE." GEN-2016-153 and GEN-2017-086 are wind farms with a maximum summer and winter queue capacity of 134 MW and 150 MW, respectively, with Energy Resource Interconnection Service (ERIS).

The GEN-2016-153 and GEN-2017-086 projects are in the DISIS-2016-002 and DISIS-2017-001 clusters, respectively. Figure 2-1 shows the powerflow model single line diagram for the existing GEN-2016-153 and GEN-2017-086 configuration. The GEN-2016-153 and GEN-2017-086 projects interconnect in the Westar Energy (WR) control area with a capacity of 134 MW and 150 MW, respectively, as shown in Table 2-1 below.

Table 0-1: GEN-2016-153 and GEN-2017-086 Existing Configuration

REQUEST	POINT OF INTERCONNECTION	EXISTING GENERATOR CONFIGURATION	GIA CAPACITY (MW)
GEN-2016-153	Viola 345kV (532798)	67 x 2.0 MW Vestas Wind Turbines	134
GEN-2017-086		75 x 2.0 MW Vestas Wind Turbines	150

Figure 0-1: GEN-2016-153 and GEN-2017-086 Single Line Diagram (Existing Configuration)

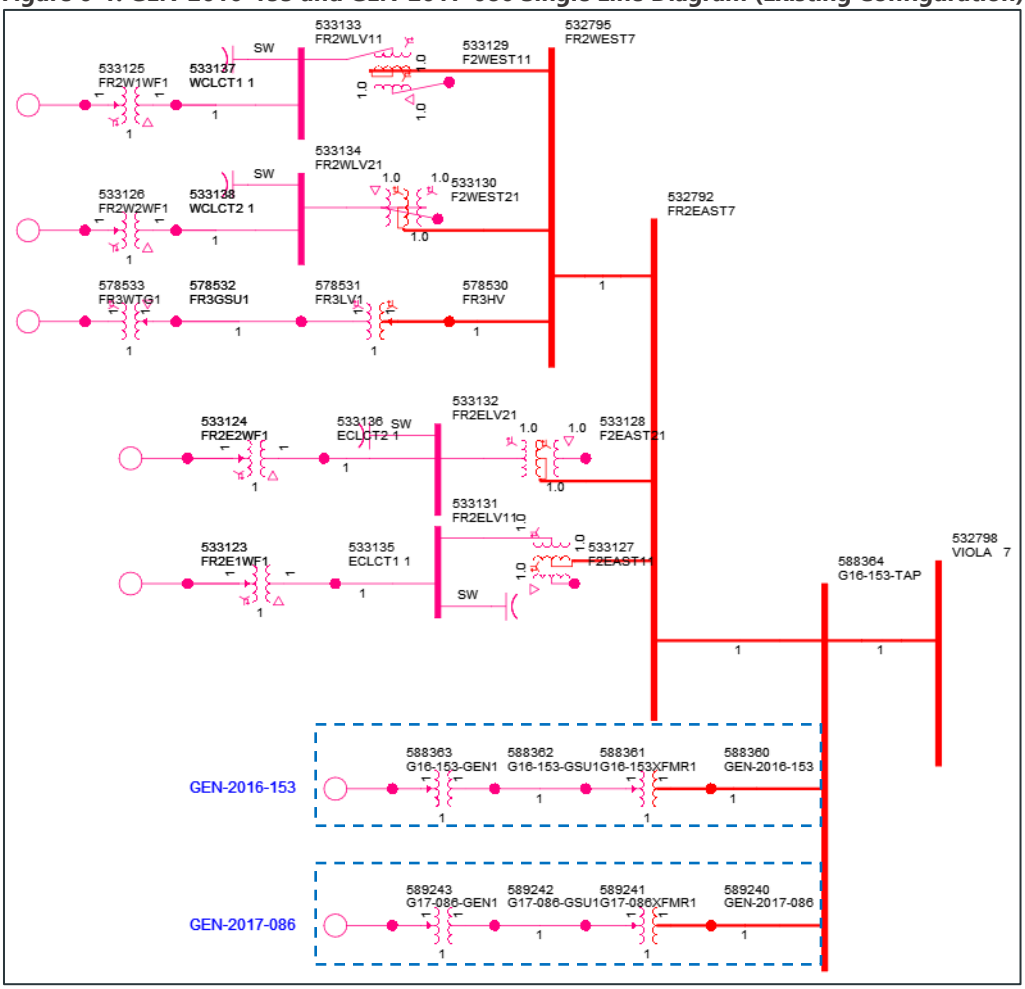

This Study has been requested by the Interconnection Customer to evaluate the modification of GEN-2016-153 and GEN-2017-086 to turbine configurations to 30 x Vestas 4.5 MW (135 MW) and 34 x Vestas 4.5 MW (153 MW), respectively. The generating capacity for GEN-2016-153 (135 MW) and GEN-2017-086 (153 MW) both exceed their respective Generator Interconnection Agreement (GIA) Interconnection Service amounts (134 MW and 153 MW) as listed in Appendix A of the GIAs. As a result, the customer must ensure that the amount of power injected from each request at the POI does not exceed the Interconnection Service amount listed in each GIA.

In addition, the modification request included changes to the collection system, generator step-up transformer, generation interconnection line, and main substation transformer. Figure 2-2 shows the powerflow model single line diagram for the GEN-2016-153 and GEN-2017-086 modification. The existing and modified configurations for GEN-2016-153 and GEN-2017-086 are shown in Table 2-2.

Figure 0-2: GEN-2016-153 and GEN-2017-086 Single Line Diagram (Modification Configuration)

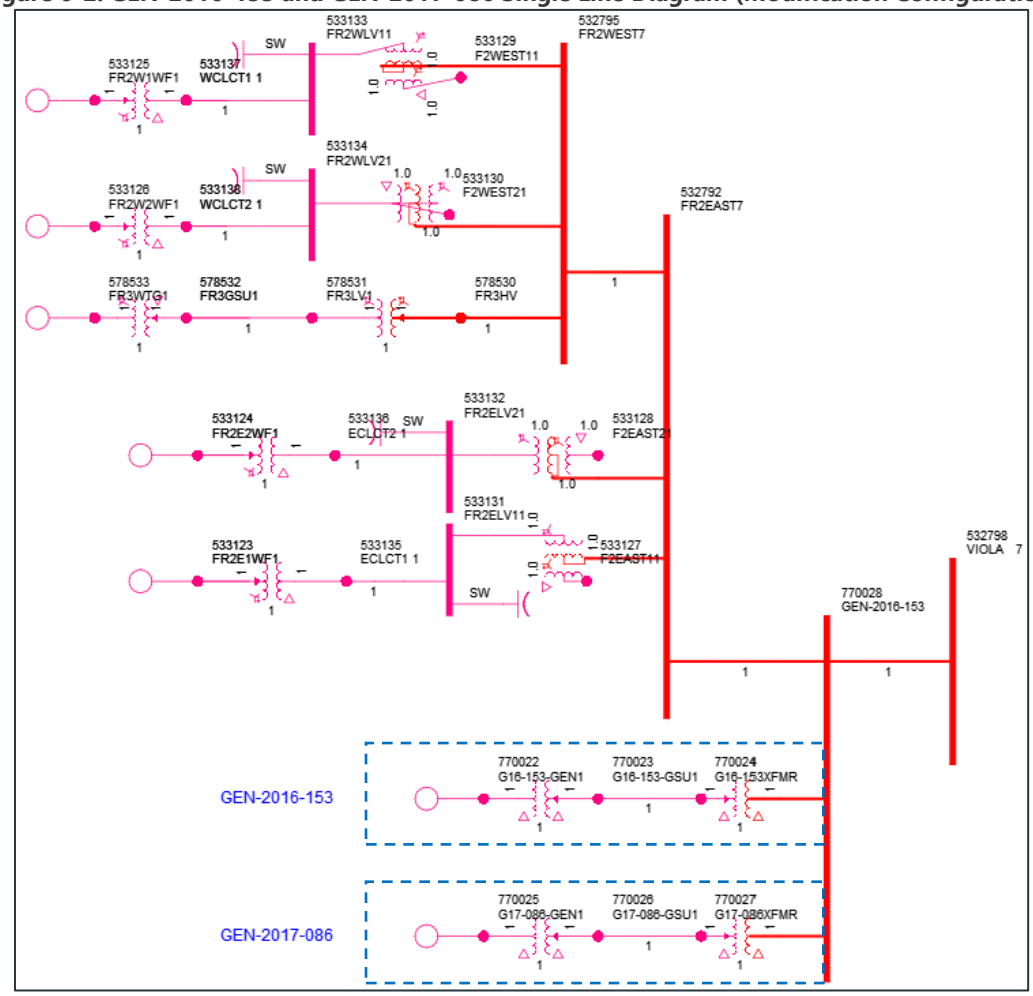

Table 0-2: GEN-2016-153 and GEN-2017-086 Modification Request

Facility	Existing Generating Facility Configuration			Modification Generating Facility Configuration	
	GEN-2016-153	GEN-2017-086		GEN-2016-153	GEN-2017-086
Point of Interconnection	Viola 345 kV Substation (532798)			Viola 345 kV Substation (532798)	
Configuration/Capacity	67 x 2.0 MW Vestas Wind Turbines = 134 MW	75 x 2.0 MW Vestas Wind Turbines = 150 MW		30 x Vestas 4.5 MW Wind Turbines = 135.0 MW	34 x Vestas 4.5 MW Wind Turbines = 153.0 MW
Generation Interconnection Line	Length = 23.9 miles			Length = 19.8 miles	
	R = 0.0119 pu			R = 0.00985801 pu	
	X = 0.014413 pu			X = 0.011943478 pu	
	B = 0.167863 pu			B = 0.139145547 pu	
Main Substation Transformer	R = 0.004574 pu	R = 0.005045 pu		R = 0.0023895 pu	R = 0.0023895 pu
	X = 0.097893 pu	X = 0.097339 pu		X = 0.0979695 pu	X = 0.0979695 pu
	Winding MVA = 84 MVA	Winding MVA = 112 MVA		Winding MVA = 113 MVA	Winding MVA = 113 MVA
	Rating MVA = 140 MVA	Rating MVA = 187 MVA		Rating MVA = 189 MVA	Rating MVA = 189 MVA
Equivalent Collector Line	R = 0.0000 pu	R = 0.0000 pu		R = 0.00713 pu	R = 0.006116 pu
	X = 0.0001 pu	X = 0.0001 pu		X = 0.012921 pu	X = 0.010599 pu
	B = 0.0000 pu	B = 0.0000 pu		B = 0.077845 pu	B = 0.079923 pu
GSU Transformer	Gen Equivalent Qty: 67	Gen Equivalent Qty = 65	Gen Equivalent Qty = 10	Gen Equivalent Qty: 30	Gen Equivalent Qty: 34
	R = 0.008868 pu	R = 0.008953 pu	R = 0.008868 pu	R = 0.0080029 pu	R = 0.0080029 pu
	X = 0.089562 pu	X = 0.097590 pu	X = 0.089562 pu	X = 0.0986758 pu	X = 0.0986758 pu
	Winding MVA = 140.7 MVA	Winding MVA = 149.5 MVA	Winding MVA = 21 MVA	Winding MVA = 159 MVA	Winding MVA = 180.2 MVA
	Rating MVA = 140.7 MVA	Rating MVA = 149.5 MVA	Rating MVA = 21 MVA	Rating MVA = 159 MVA	Rating MVA = 180.2 MVA
Generator Dynamic Model and Power Factor	REGCA1 Leading and Lagging = ±0.93	REGCA1 Leading and Lagging = ±0.93	REGCA1 Leading and Lagging = ±0.93	CP220961102 Leading = 0.926 Lagging = 0.87	CP220961102 Leading = 0.926 Lagging = 0.87
Reactive Power Devices	N/A			N/A	

EXISTING VERSUS MODIFICATION COMPARISON

To determine which analyses are required for the Study, the differences between the existing configuration and the requested modification were evaluated. SPP performed this comparison and the resulting analyses using a set of modified study models developed based on the modification request data and the DISIS-2017-002 study models.

The methodology and results of the comparisons are described below. The analysis was completed using PSS/E version 34 software.

STABILITY MODEL PARAMETERS COMPARISON

SPP determined that short circuit and dynamic stability analyses were required because of the inverter change from Vestas 2.0 MW wind turbines to Vestas 4.5 MW wind turbines. This is because the short circuit contribution and stability responses of the existing configuration and the requested modification's configuration may differ. The generator dynamic model for the modification can be found in Appendix A.

As short circuit and dynamic stability analyses were required, a turbine parameters comparison was not needed for the determination of the scope of the study.

EQUIVALENT IMPEDANCE COMPARISON CALCULATION

As the inverter change determined that short circuit and dynamic stability analyses were required, an equivalent impedance comparison was not needed for the determination of the scope of the study.

CHARGING CURRENT COMPENSATION ANALYSIS

The charging current compensation analysis was performed for GEN-2016-153 and GEN-2017-086 to determine the capacitive charging effects during reduced generation conditions (unsuitable wind speeds, unsuitable solar irradiance, insufficient state of charge, idle conditions, curtailment, etc.) at the generation site and to size shunt reactors that would reduce the project reactive power contribution to the POI to approximately zero.

METHODOLOGY AND CRITERIA

The GEN-2016-153 and GEN-2017-086 generators and capacitors were individually switched out of service while other system elements remained in-service. A shunt reactor was tested at the project's collection substation 34.5 kV bus to set the MVAr flow into the POI to approximately zero. The size of the shunt reactor is equivalent to the charging current value at unity voltage and the compensation provided is proportional to the voltage effects on the charging current (i.e., for voltages above unity, reactive compensation is greater than the size of the reactor).

SPP performed the charging current compensation analysis using the modification request data based on the 2025 Summer Peak (25SP) DISIS-2017-002 stability study models.

RESULTS

The results from the analysis showed that the GEN-2016-153 project needed approximately 21.9 MVAr of compensation at its project substation to reduce the POI MVAr to zero. The results for GEN-2017-086 show the need for 22.1 MVAr of compensation. Figure 4-1 and Figure 4-2 illustrates the shunt reactor size needed to reduce the POI MVAr to approximately zero with the updated topology. The final shunt reactor requirements for GEN-2016-153 and GEN-2017-086 are shown in Table 4-1.

The information gathered from the charging current compensation analysis is provided as informational to the Interconnection Customer and Transmission Owner and/or Transmission Operator. The applicable reactive power requirements will be further reviewed by the Transmission Owner and/or Transmission Operator.

Table 0-1: Shunt Reactor Size for Reduced Generation Study (Modification)

MACHINE	POI BUS NUMBER	POI BUS NAME	REACTOR SIZE (MVAR)
			25SP
GEN-2016-153	532798	Viola 345 kV	21.9
GEN-2017-086			22.1

Figure 0-1: GEN-2016-153 Single Line Diagram w/ Charging Current Compensation (Modification)

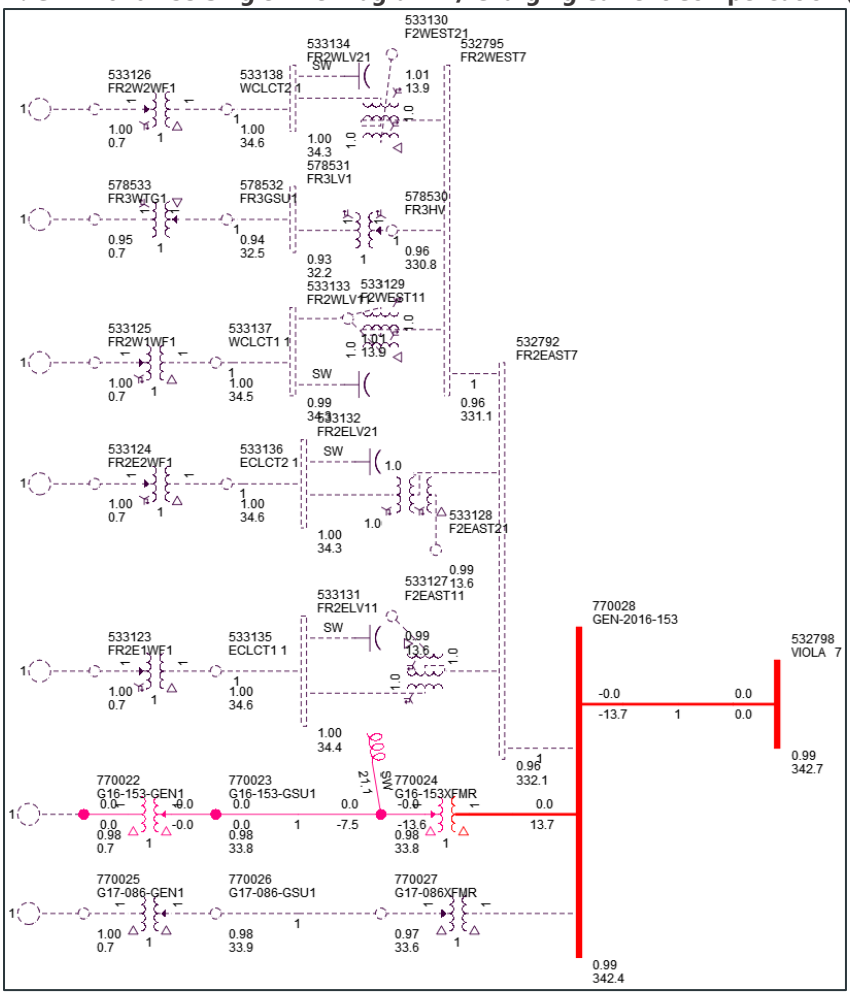

Figure 0-2: GEN-2017-086 Single Line Diagram w/ Charging Current Compensation (Modification)

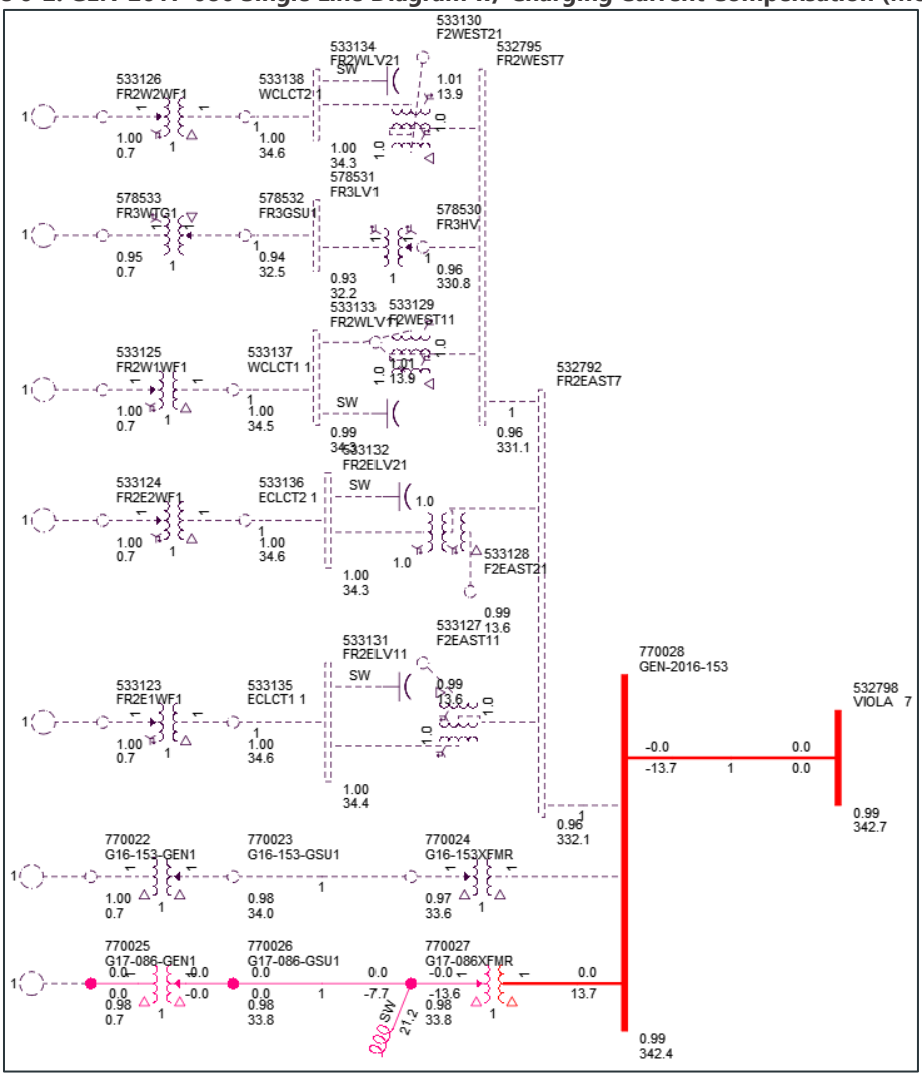

SHORT CIRCUIT ANALYSIS

A short circuit study was performed using the 25SP model for GEN-2016-153 and GEN-2017-086. The detailed results of the short circuit analysis are provided in Appendix B.

METHODOLOGY

The short circuit analysis included applying a three-phase fault on buses up to 5 levels away from the 345 kV POI bus. The PSS/E "Automatic Sequence Fault Calculation (ASCC)" fault analysis module was used to calculate the fault current levels in the transmission system with and without GEN-2016-153 and GEN-2017-086 online.

SPP created a short circuit model using the 25SP DISIS-2017-002 stability study model by adjusting the GEN-2016-153 and GEN-2017-086 short circuit parameters consistent with the modification data. The adjusted parameters are shown in Table 5-1 below.

Table 0-1: Short Circuit Model Parameters*

PARAMETER	VALUE BY GENERATOR BUS#	
	770022 (GEN-2016-153)	770025 (GEN-2017-086)
Machine MVA Base	135.0	153.0
R (pu)	0.3	0.3
X'' (pu)	1.2	1.2

*pu values based on Machine MVA Base

RESULTS

The results of the short circuit analysis for the 25SP model are summarized in Table 5-2 and Table 5-3. The GEN-2016-153 and GEN-2017-086 POI bus (Viola 345 kV - 532798) fault current magnitudes are provided in Table 5-2 showing a maximum fault current of 13.31 kA with the GEN-2016-153 and GEN-2017-086 projects online. Table 5-3 shows the maximum fault current magnitudes and fault current increases with the study projects online. The maximum fault current calculated within five buses of the study projects' POI (including the POI bus) was less than 40 kA for the 25SP model.

The maximum GEN-2016-153 and GEN-2017-086 contribution to three-phase fault current was 4.38% and 0.326 kA.

Table 0-1: POI Short Circuit Results

CASE	GEN-OFF CURRENT (KA)	GEN-ON CURRENT (KA)	MAX KA CHANGE	MAX %CHANGE
25SP	13.03	13.31	0.16	2.15%

Table 0-2: 25SP Short Circuit Results

VOLTAGE (KV)	MAX. CURRENT (KA)	MAX KA CHANGE	MAX %CHANGE
69	28.457	0.055	0.19
115	22.222	0.012	0.05
138	30.493	0.227	0.98
230	21.676	0.003	0.02
345	30.273	0.326	4.38
Max	**30.493**	**0.326**	**4.38**

DYNAMIC STABILITY ANALYSIS

SPP performed a dynamic stability analysis to identify the impact of the inverter configuration change and other modifications to GEN-2016-153 and GEN-2017-086. The analysis was performed according to SPP's Disturbance Performance Requirements[2] shown in Appendix C. The modification details are described in the Project and Modification Request section and the dynamic modeling data is provided in Appendix A. The existing base case issues and simulation plots can be found in Appendix D.

METHODOLOGY AND CRITERIA

The dynamic stability analysis was performed using models developed with the requested GEN-2016-153 and GEN-2017-086 configuration to Vestas 4.5 MW wind turbines (CP220961102). This stability analysis was performed using PTI's PSS/E version 34.8.0 software.

The modifications requested for the GEN-2016-153 and GEN-2017-086 projects were used to create modified stability models for this impact study based on the DISIS-2017-002 stability study models:

1. 2025 Summer Peak (25SP),
2. 2025 Winter Peak (25WP)

The modified dynamic model data for the GEN-2016-153 and GEN-2017-086 projects are provided in Appendix A. The modified powerflow models and associated dynamic database were initialized (no-fault test) to confirm that there were no errors in the initial conditions of the system and the dynamic data.

The following system adjustments were made to address pre-existing issues that are not attributed to the modification request:

1. Disable mechanical model and torque controller at 534023.
2. Disable voltage relays at 534020, 534022, 534023, 539845, 539846, 539847, 539848, 539852, 539853, 760307, 760623, 760644, 760664, 761841, and 761844.
3. Disable voltage and frequency relays at 533560, 534021, 587503, 589063, 760287, 760812, and 760815.

[2] SPP Disturbance Performance Requirements: https://www.spp.org/documents/28859/spp%20disturbance%20performance%20requirements%20(twg%20approved).pdf

During the fault simulations, the study requests and other generation within the cluster group[3] and adjacent powerflow areas were monitored for compliance with the SPP Disturbance Performance Criteria. The machine rotor angle for synchronous machines within the study areas including 330 (AECI), 520 (AEPW), 524 (OKGE), 531 (MIDW), 534 (SUNC), 536 (WERE), 541 (KCPL), 542 (KACY), 544 (EMDE), 545 (INDN), 546 (SPRM), 640 (NPPD), and 645 (OPPD) were monitored. In addition, the voltages of all 100 kV and above buses within the study area were monitored.

FAULT DEFINITIONS

SPP developed and simulated faults for GEN-2016-153 and GEN-2017-086 using the modified study models. The fault events included three-phase faults and single-line-to-ground stuck breaker faults. Single-line-to-ground faults are approximated by applying a fault impedance to bring the faulted bus positive sequence voltage to 0.6 pu. The simulated faults are listed and described in Table 6-1 below. These contingencies were applied to the modified 25SP and 25WP models.

Table 0-1: Fault Definitions

FAULT ID	PLANNING EVENT	FAULT DESCRIPTIONS
FLT9001-3PH	P1	3 phase fault on the VIOLA 7 345kV (532798)/ 138 kV (533075)/ 13.8 kV (532832) XFMR CKT 1, near VIOLA 7 345 kV. a. Apply fault at the VIOLA 7 345 kV bus. b. Clear fault after 6 cycles and trip the faulted XFMR.
FLT9002-3PH	P1	3 phase fault on the VIOLA 7 (532798) to RENFROW7 (515543) 345 kV line CKT 1, near VIOLA 7. a. Apply fault at the VIOLA 7 345 kV bus. b. Clear fault after 6 cycles by tripping the faulted line. c. Wait 20 cycles, and then re-close the line in (b) back into the fault. d. Leave fault on for 6 cycles, then trip the line in (b) and remove fault.
FLT9003-3PH	P1	3 phase fault on the VIOLA 7 (532798) to WICHITA7 (532796) 345 kV line CKT 1, near VIOLA 7. a. Apply fault at the VIOLA 7 345 kV bus. b. Clear fault after 6 cycles by tripping the faulted line. c. Wait 20 cycles, and then re-close the line in (b) back into the fault. d. Leave fault on for 6 cycles, then trip the line in (b) and remove fault.
FLT9004-3PH	P1	3 phase fault on the VIOLA 4 (533075) to GILL 4 (533047) 138 kV line CKT 1, near VIOLA 4. a. Apply fault at the VIOLA 4 138 kV bus. b. Clear fault after 7 cycles by tripping the faulted line. c. Wait 20 cycles, and then re-close the line in (b) back into the fault. d. Leave fault on for 7 cycles, then trip the line in (b) and remove fault.
FLT9005-3PH	P1	3 phase fault on the VIOLA 4 (533075) to CLEARWT4 (533036) 138 kV line CKT 1, near VIOLA 4. a. Apply fault at the VIOLA 4 138 kV bus. b. Clear fault after 7 cycles by tripping the faulted line.

[3] Based on the DISIS-2017-002 Cluster Groups

FAULT ID	PLANNING EVENT	FAULT DESCRIPTIONS
		c. Wait 20 cycles, and then re-close the line in (b) back into the fault. d. Leave fault on for 7 cycles, then trip the line in (b) and remove fault.
FLT9006-3PH	P1	3 phase fault on the VIOLA 4 (533075) to SUMNER 4 (532984) 138 kV line CKT 1, near VIOLA 4. a. Apply fault at the VIOLA 4 138 kV bus. b. Clear fault after 7 cycles by tripping the faulted line. c. Wait 20 cycles, and then re-close the line in (b) back into the fault. d. Leave fault on for 7 cycles, then trip the line in (b) and remove fault.
FLT9007-3PH	P1	3 phase fault on the VIOLA 4 (533075) to MILAN_GOAB (539008) 138 kV line CKT 1, near VIOLA 4. a. Apply fault at the VIOLA 4 138 kV bus. b. Clear fault after 7 cycles by tripping the faulted line. c. Wait 20 cycles, and then re-close the line in (b) back into the fault. d. Leave fault on for 7 cycles, then trip the line in (b) and remove fault.
FLT9008-3PH	P1	3 phase fault on the RENFROW7 345kV (515543)/ 138 kV (515544)/ 13.8 kV (515545) XFMR CKT 1, near RENFROW7 345 kV. a. Apply fault at the RENFROW7 345 kV bus. b. Clear fault after 6 cycles and trip the faulted XFMR.
FLT9009-3PH	P1	3 phase fault on the RENFROW7 (515543) to HUNTERS7 (515476) 345 kV line CKT 1, near RENFROW7. a. Apply fault at the RENFROW7 345 kV bus. b. Clear fault after 6 cycles by tripping the faulted line. c. Wait 20 cycles, and then re-close the line in (b) back into the fault. d. Leave fault on for 6 cycles, then trip the line in (b) and remove fault.
FLT9010-3PH	P1	3 phase fault on the WICHITA7 345kV (532796)/ 138 kV (533040)/ 13.8 kV (532830) XFMR CKT 1, near WICHITA7 345 kV. a. Apply fault at the WICHITA7 345 kV bus. b. Clear fault after 6 cycles and trip the faulted XFMR.
FLT9011-3PH	P1	3 phase fault on the WICHITA7 (532796) to BUFFALO7 (532782) 345 kV line CKT 1, near WICHITA7. a. Apply fault at the WICHITA7 345 kV bus. b. Clear fault after 6 cycles by tripping the faulted line. c. Wait 20 cycles, and then re-close the line in (b) back into the fault. d. Leave fault on for 6 cycles, then trip the line in (b) and remove fault.
FLT9012-3PH	P1	3 phase fault on the WICHITA7 (532796) to RENO 7 (532771) 345 kV line CKT 1, near WICHITA7. a. Apply fault at the WICHITA7 345 kV bus. b. Clear fault after 6 cycles by tripping the faulted line. c. Wait 20 cycles, and then re-close the line in (b) back into the fault. d. Leave fault on for 6 cycles, then trip the line in (b) and remove fault.
FLT9013-3PH	P1	3 phase fault on the WICHITA7 (532796) to BENTON 7 (532791) 345 kV line CKT 1, near WICHITA7. a. Apply fault at the WICHITA7 345 kV bus. b. Clear fault after 6 cycles by tripping the faulted line. c. Wait 20 cycles, and then re-close the line in (b) back into the fault. d. Leave fault on for 6 cycles, then trip the line in (b) and remove fault.

FAULT ID	PLANNING EVENT	FAULT DESCRIPTIONS
FLT9014-3PH	P1	3 phase fault on the WICHITA7 (532796) to G14-001-TAP (562476) 345 kV line CKT 1, near WICHITA7. a. Apply fault at the WICHITA7 345 kV bus. b. Clear fault after 6 cycles by tripping the faulted line. c. Wait 20 cycles, and then re-close the line in (b) back into the fault. d. Leave fault on for 6 cycles, then trip the line in (b) and remove fault.
FLT9015-3PH	P1	3 phase fault on the VIOLA 4 (533075) to CONWAY (539009) 138 kV line CKT 1, near VIOLA 4. a. Apply fault at the VIOLA 4 138 kV bus. b. Clear fault after 7 cycles by tripping the faulted line. c. Wait 20 cycles, and then re-close the line in (b) back into the fault. d. Leave fault on for 7 cycles, then trip the line in (b) and remove fault.
FLT9016-3PH	P1	3 phase fault on the CLEARWT4 (533036) to GILL 4 (533047) 138 kV line CKT 1, near CLEARWT4. a. Apply fault at the CLEARWT4 138 kV bus. b. Clear fault after 7 cycles by tripping the faulted line. c. Wait 20 cycles, and then re-close the line in (b) back into the fault. d. Leave fault on for 7 cycles, then trip the line in (b) and remove fault.
FLT9017-3PH	P1	3 phase fault on the GILL 4 (533047) to GILL W 4 (533045) 138 kV line CKT Z1, near GILL 4. a. Apply fault at the GILL 4 138 kV bus. b. Clear fault after 7 cycles by tripping the faulted line. c. Wait 20 cycles, and then re-close the line in (b) back into the fault. d. Leave fault on for 7 cycles, then trip the line in (b) and remove fault.
FLT9018-3PH	P1	3 phase fault on the GILL W 4 (533045) to GILL S 4 (533046) 138 kV line CKT Z1, near GILL W 4. a. Apply fault at the GILL W 4 138 kV bus. b. Clear fault after 7 cycles by tripping the faulted line. c. Wait 20 cycles, and then re-close the line in (b) back into the fault. d. Leave fault on for 7 cycles, then trip the line in (b) and remove fault.
FLT9019-3PH	P1	3 phase fault on the GILL W 4 (533045) to GILL E 4 (533044) 138 kV line CKT Z1, near GILL W 4. a. Apply fault at the GILL W 4 138 kV bus. b. Clear fault after 7 cycles by tripping the faulted line. c. Wait 20 cycles, and then re-close the line in (b) back into the fault. d. Leave fault on for 7 cycles, then trip the line in (b) and remove fault.
FLT9020-3PH	P1	3 phase fault on the GILL 4 (533047) to GILL S 4 (533046) 138 kV line CKT Z1, near GILL 4. a. Apply fault at the GILL 4 138 kV bus. b. Clear fault after 7 cycles by tripping the faulted line. c. Wait 20 cycles, and then re-close the line in (b) back into the fault. d. Leave fault on for 7 cycles, then trip the line in (b) and remove fault.
FLT9021-3PH	P1	3 phase fault on the GILL E 4 (533044) to INTERST4 (533051) 138 kV line CKT 1, near GILL E 4. a. Apply fault at the GILL E 4 138 kV bus. b. Clear fault after 7 cycles by tripping the faulted line. c. Wait 20 cycles, and then re-close the line in (b) back into the fault. d. Leave fault on for 7 cycles, then trip the line in (b) and remove fault.
FLT9022-3PH	P1	3 phase fault on the GILL E 4 138kV (533044)/ 69 kV (533796)/ 14.4 kV (532733) XFMR CKT 1, near GILL E 4 138 kV. a. Apply fault at the GILL E 4 138 kV bus. b. Clear fault after 7 cycles and trip the faulted XFMR.

FAULT ID	PLANNING EVENT	FAULT DESCRIPTIONS
FLT9023-3PH	P1	3 phase fault on the GILL S 4 138kV (533046)/ 69 kV (533795)/ 13.2 kV (533106) XFMR CKT 1, near GILL S 4 138 kV. a. Apply fault at the GILL S 4 138 kV bus. b. Clear fault after 7 cycles and trip the faulted XFMR.
FLT9024-3PH	P1	3 phase fault on the GILL S 4 (533046) to 59TH ST4 (533029) 138 kV line CKT 1, near GILL S 4. a. Apply fault at the GILL S 4 138 kV bus. b. Clear fault after 7 cycles by tripping the faulted line. c. Wait 20 cycles, and then re-close the line in (b) back into the fault. d. Leave fault on for 7 cycles, then trip the line in (b) and remove fault.
FLT9025-3PH	P1	3 phase fault on the SUMNER 4 (532984) to SC10BEL4 (533063) 138 kV line CKT 1, near SUMNER 4. a. Apply fault at the SUMNER 4 138 kV bus. b. Clear fault after 7 cycles by tripping the faulted line. c. Wait 20 cycles, and then re-close the line in (b) back into the fault. d. Leave fault on for 7 cycles, then trip the line in (b) and remove fault.
FLT9026-3PH	P1	3 phase fault on the SC10BEL4 (533063) to FARBER 4 (533042) 138 kV line CKT 1, near SC10BEL4. a. Apply fault at the SC10BEL4 138 kV bus. b. Clear fault after 7 cycles by tripping the faulted line. c. Wait 20 cycles, and then re-close the line in (b) back into the fault. d. Leave fault on for 7 cycles, then trip the line in (b) and remove fault.
FLT9027-3PH	P1	3 phase fault on the SUMNER 4 (532984) to TIMBJCT4 (532992) 138 kV line CKT 1, near SUMNER 4. a. Apply fault at the SUMNER 4 138 kV bus. b. Clear fault after 7 cycles by tripping the faulted line. c. Wait 20 cycles, and then re-close the line in (b) back into the fault. d. Leave fault on for 7 cycles, then trip the line in (b) and remove fault.
FLT9028-3PH	P1	3 phase fault on the SUMNER 4 (532984) to OXFORD 4 (532982) 138 kV line CKT 1, near SUMNER 4. a. Apply fault at the SUMNER 4 138 kV bus. b. Clear fault after 7 cycles by tripping the faulted line. c. Wait 20 cycles, and then re-close the line in (b) back into the fault. d. Leave fault on for 7 cycles, then trip the line in (b) and remove fault.
FLT9029-3PH	P1	3 phase fault on the OXFORD 4 (532982) to CRESWLN4 (532981) 138 kV line CKT 1, near OXFORD 4. a. Apply fault at the OXFORD 4 138 kV bus. b. Clear fault after 7 cycles by tripping the faulted line. c. Wait 20 cycles, and then re-close the line in (b) back into the fault. d. Leave fault on for 7 cycles, then trip the line in (b) and remove fault.
FLT9030-3PH	P1	3 phase fault on the RENFROW4 (515544) to WFEC_RNFRO4 (520409) 138 kV line CKT 1, near RENFROW4. a. Apply fault at the RENFROW4 138 kV bus. b. Clear fault after 7 cycles by tripping the faulted line. c. Wait 20 cycles, and then re-close the line in (b) back into the fault. d. Leave fault on for 7 cycles, then trip the line in (b) and remove fault.
FLT9031-3PH	P1	3 phase fault on the RENFROW4 (515544) to GRANTCO4 (515546) 138 kV line CKT 1, near RENFROW4. a. Apply fault at the RENFROW4 138 kV bus. b. Clear fault after 7 cycles by tripping the faulted line.

FAULT ID	PLANNING EVENT	FAULT DESCRIPTIONS
		c. Wait 20 cycles, and then re-close the line in (b) back into the fault. d. Leave fault on for 7 cycles, then trip the line in (b) and remove fault.
FLT9032-3PH	P1	3 phase fault on the RENFROW4 (515544) to MDFRDTP4 (515569) 138 kV line CKT 1, near RENFROW4. a. Apply fault at the RENFROW4 138 kV bus. b. Clear fault after 7 cycles by tripping the faulted line. c. Wait 20 cycles, and then re-close the line in (b) back into the fault. d. Leave fault on for 7 cycles, then trip the line in (b) and remove fault.
FLT9033-3PH	P1	3 phase fault on the HUNTERS7 (515476) to WOODRNG7 (514715) 345 kV line CKT 1, near HUNTERS7. a. Apply fault at the HUNTERS7 345 kV bus. b. Clear fault after 6 cycles by tripping the faulted line. c. Wait 20 cycles, and then re-close the line in (b) back into the fault. d. Leave fault on for 6 cycles, then trip the line in (b) and remove fault.
FLT9034-3PH	P1	3 phase fault on the MILAN_GOAB (539008) to CLDWELL4 (539003) 138 kV line CKT 1, near MILAN_GOAB. a. Apply fault at the MILAN_GOAB 138 kV bus. b. Clear fault after 7 cycles by tripping the faulted line. c. Wait 20 cycles, and then re-close the line in (b) back into the fault. d. Leave fault on for 7 cycles, then trip the line in (b) and remove fault.
FLT9035-3PH	P1	3 phase fault on the MILAN_GOAB (539008) to MILAN 4 (539676) 138 kV line CKT 1, near MILAN_GOAB. a. Apply fault at the MILAN_GOAB 138 kV bus. b. Clear fault after 7 cycles by tripping the faulted line. c. Wait 20 cycles, and then re-close the line in (b) back into the fault. d. Leave fault on for 7 cycles, then trip the line in (b) and remove fault.
FLT9036-3PH	P1	3 phase fault on the BUFFALO7 (532782) to THISTLE7 (539801) 345 kV line CKT 1, near BUFFALO7. a. Apply fault at the BUFFALO7 345 kV bus. b. Clear fault after 6 cycles by tripping the faulted line. c. Wait 20 cycles, and then re-close the line in (b) back into the fault. d. Leave fault on for 6 cycles, then trip the line in (b) and remove fault.
FLT9037-3PH	P1	3 phase fault on the RENO 7 345kV (532771)/ 115 kV (533416)/ 14.4 kV (532810) XFMR CKT 1, near RENO 7 345 kV. a. Apply fault at the RENO 7 345 kV bus. b. Clear fault after 6 cycles and trip the faulted XFMR.
FLT9038-3PH	P1	3 phase fault on the G14_001T (562476) to EMPEC 7 (532768) 345 kV line CKT 1, near G14_001T. a. Apply fault at the G14_001T 345 kV bus. b. Clear fault after 6 cycles by tripping the faulted line. c. Wait 20 cycles, and then re-close the line in (b) back into the fault. d. Leave fault on for 6 cycles, then trip the line in (b) and remove fault.
FLT9039-3PH	P1	3 phase fault on the BENTON 7 345kV (532791)/ 138 kV (532986)/ 13.8 kV (532821) XFMR CKT 1, near BENTON 7 345 kV. a. Apply fault at the BENTON 7 345 kV bus. b. Clear fault after 6 cycles and trip the faulted XFMR.

FAULT ID	PLANNING EVENT	FAULT DESCRIPTIONS
FLT9040-3PH	P1	3 phase fault on the BENTON 7 (532791) to WOLFCRK7 (532797) 345 kV line CKT 1, near BENTON 7. a. Apply fault at the BENTON 7 345 kV bus. b. Clear fault after 6 cycles by tripping the faulted line. c. Wait 20 cycles, and then re-close the line in (b) back into the fault. d. Leave fault on for 6 cycles, then trip the line in (b) and remove fault.
FLT9041-3PH	P1	3 phase fault on the BENTON 7 (532791) to ROSEHIL7 (532794) 345 kV line CKT 1, near BENTON 7. a. Apply fault at the BENTON 7 345 kV bus. b. Clear fault after 6 cycles by tripping the faulted line. c. Wait 20 cycles, and then re-close the line in (b) back into the fault. d. Leave fault on for 6 cycles, then trip the line in (b) and remove fault.
FLT9042-3PH	P1	3 phase fault on the ROSEHIL7 (532794) to WOLFCRK7 (532797) 345 kV line CKT 1, near ROSEHIL7. a. Apply fault at the ROSEHIL7 345 kV bus. b. Clear fault after 6 cycles by tripping the faulted line. c. Wait 20 cycles, and then re-close the line in (b) back into the fault. d. Leave fault on for 6 cycles, then trip the line in (b) and remove fault.
FLT9043-3PH	P1	3 phase fault on the EVANS N4 (533040) to EVANS S4 (533041) 138 kV line CKT Z1, near EVANS N4. a. Apply fault at the EVANS N4 138 kV bus. b. Clear fault after 7 cycles by tripping the faulted line. c. Wait 20 cycles, and then re-close the line in (b) back into the fault. d. Leave fault on for 7 cycles, then trip the line in (b) and remove fault.
FLT9044-3PH	P1	3 phase fault on the EVANS S4 (533041) to LAKERDG4 (533053) 138 kV line CKT 1, near EVANS S4. a. Apply fault at the EVANS S4 138 kV bus. b. Clear fault after 7 cycles by tripping the faulted line. c. Wait 20 cycles, and then re-close the line in (b) back into the fault. d. Leave fault on for 7 cycles, then trip the line in (b) and remove fault.
FLT9045-3PH	P1	3 phase fault on the EVANS S4 (533041) to 45TH ST4 (533074) 138 kV line CKT 1, near EVANS S4. a. Apply fault at the EVANS S4 138 kV bus. b. Clear fault after 7 cycles by tripping the faulted line. c. Wait 20 cycles, and then re-close the line in (b) back into the fault. d. Leave fault on for 7 cycles, then trip the line in (b) and remove fault.
FLT9046-3PH	P1	3 phase fault on the 45TH ST4 (533074) to COWSKIN4 (533038) 138 kV line CKT 1, near 45TH ST4. a. Apply fault at the 45TH ST4 138 kV bus. b. Clear fault after 7 cycles by tripping the faulted line. c. Wait 20 cycles, and then re-close the line in (b) back into the fault. d. Leave fault on for 7 cycles, then trip the line in (b) and remove fault.
FLT9047-3PH	P1	3 phase fault on the EVANS N4 (533040) to SG12COL4 (533065) 138 kV line CKT 1, near EVANS N4. a. Apply fault at the EVANS N4 138 kV bus. b. Clear fault after 7 cycles by tripping the faulted line. c. Wait 20 cycles, and then re-close the line in (b) back into the fault. d. Leave fault on for 7 cycles, then trip the line in (b) and remove fault.

FAULT ID	PLANNING EVENT	FAULT DESCRIPTIONS
FLT9048-3PH	P1	3 phase fault on the EVANS N4 (533040) to MAIZE 4 (533054) 138 kV line CKT 1, near EVANS N4. a. Apply fault at the EVANS N4 138 kV bus. b. Clear fault after 7 cycles by tripping the faulted line. c. Wait 20 cycles, and then re-close the line in (b) back into the fault. d. Leave fault on for 7 cycles, then trip the line in (b) and remove fault.
FLT9049-3PH	P1	3 phase fault on the CONWAY (539009) to MILANTP4 (539675) 138 kV line CKT 1, near CONWAY. a. Apply fault at the CONWAY 138 kV bus. b. Clear fault after 7 cycles by tripping the faulted line. c. Wait 20 cycles, and then re-close the line in (b) back into the fault. d. Leave fault on for 7 cycles, then trip the line in (b) and remove fault.
FLT9050-3PH	P1	3 phase fault on the MILANTP4 (539675) to HARPER 4 (539668) 138 kV line CKT 1, near MILANTP4. a. Apply fault at the MILANTP4 138 kV bus. b. Clear fault after 7 cycles by tripping the faulted line. c. Wait 20 cycles, and then re-close the line in (b) back into the fault. d. Leave fault on for 7 cycles, then trip the line in (b) and remove fault.
FLT9051-3PH	P1	3 phase fault on the RENO 7 (532771) to G16-111-TAP (587884) 345 kV line CKT 1, near RENO 7. a. Apply fault at the RENO 7 345 kV bus. b. Clear fault after 6 cycles by tripping the faulted line. c. Wait 20 cycles, and then re-close the line in (b) back into the fault. d. Leave fault on for 6 cycles, then trip the line in (b) and remove fault.
FLT9053-3PH	P1	3 phase fault on the VIOLA 7 (532798) to GEN-2016-153 (770028) 345 kV line CKT 1, near VIOLA 7. a. Apply fault at the VIOLA 7 345 kV bus. b. Clear fault after 6 cycles by tripping the faulted line. c. Wait 20 cycles, and then re-close the line in (b) back into the fault. d. Leave fault on for 6 cycles, then trip the line in (b) and remove fault.
FLT9054-3PH	P1	3 phase fault on the BUFFALO7 (532782) to KINGMAN7 (532783) 345 kV line CKT 1, near BUFFALO7. a. Apply fault at the BUFFALO7 345 kV bus. b. Clear fault after 6 cycles by tripping the faulted line. c. Wait 20 cycles, and then re-close the line in (b) back into the fault. d. Leave fault on for 6 cycles, then trip the line in (b) and remove fault.
FLT9055-3PH	P1	3 phase fault on the BUFFALO7 (532782) to GEN-2017-220 (760284) 345 kV line CKT 1, near BUFFALO7. a. Apply fault at the BUFFALO7 345 kV bus. b. Clear fault after 6 cycles by tripping the faulted line. c. Wait 20 cycles, and then re-close the line in (b) back into the fault. d. Leave fault on for 6 cycles, then trip the line in (b) and remove fault.
FLT9056-3PH	P1	3 phase fault on the BUFFALO7 (532782) to THISTLE7 (539801) 345 kV line CKT 1, near BUFFALO7. a. Apply fault at the BUFFALO7 345 kV bus. b. Clear fault after 6 cycles by tripping the faulted line. c. Wait 20 cycles, and then re-close the line in (b) back into the fault. d. Leave fault on for 6 cycles, then trip the line in (b) and remove fault.

FAULT ID	PLANNING EVENT	FAULT DESCRIPTIONS
FLT9057-3PH	P1	3 phase fault on the EVANS N4 (533040) to GEN-2017-179 (760620) 138 kV line CKT 1, near EVANS N4. a. Apply fault at the EVANS N4 138 kV bus. b. Clear fault after 7 cycles by tripping the faulted line. c. Wait 20 cycles, and then re-close the line in (b) back into the fault. d. Leave fault on for 7 cycles, then trip the line in (b) and remove fault.
FLT9058-3PH	P1	3 phase fault on the EVANS N4 (533040) to GEN-2017-068 (589060) 138 kV line CKT 1, near EVANS N4. a. Apply fault at the EVANS N4 138 kV bus. b. Clear fault after 7 cycles by tripping the faulted line. c. Wait 20 cycles, and then re-close the line in (b) back into the fault. d. Leave fault on for 7 cycles, then trip the line in (b) and remove fault.
FLT9059-3PH	P1	3 phase fault on the EVANS N4 (533040) to GEN-2017-226 (760641) 138 kV line CKT 1, near EVANS N4. a. Apply fault at the EVANS N4 138 kV bus. b. Clear fault after 7 cycles by tripping the faulted line. c. Wait 20 cycles, and then re-close the line in (b) back into the fault. d. Leave fault on for 7 cycles, then trip the line in (b) and remove fault.
FLT9060-3PH	P1	3 phase fault on the GILL W 4 (533045) to WACO S 4 (533071) 138 kV line CKT 1, near GILL W 4. a. Apply fault at the GILL W 4 138 kV bus. b. Clear fault after 7 cycles by tripping the faulted line. c. Wait 20 cycles, and then re-close the line in (b) back into the fault. d. Leave fault on for 7 cycles, then trip the line in (b) and remove fault.
FLT9061-3PH	P1	3 phase fault on the RENFROW7 (515543) to GEN-2017-203 (760809) 345 kV line CKT 1, near RENFROW7. a. Apply fault at the RENFROW7 345 kV bus. b. Clear fault after 6 cycles by tripping the faulted line. c. Wait 20 cycles, and then re-close the line in (b) back into the fault. d. Leave fault on for 6 cycles, then trip the line in (b) and remove fault.
FLT9062-3PH	P1	3 phase fault on the RENFROW7 (515543) to GRNTWD 7 (515646) 345 kV line CKT 1, near RENFROW7. a. Apply fault at the RENFROW7 345 kV bus. b. Clear fault after 6 cycles by tripping the faulted line. c. Wait 20 cycles, and then re-close the line in (b) back into the fault. d. Leave fault on for 6 cycles, then trip the line in (b) and remove fault.
FLT9063-3PH	P1	3 phase fault on the HUNTERS7 (515476) to CHSHLMV7 (515477) 345 kV line CKT 1, near HUNTERS7. a. Apply fault at the HUNTERS7 345 kV bus. b. Clear fault after 6 cycles by tripping the faulted line. c. Wait 20 cycles, and then re-close the line in (b) back into the fault. d. Leave fault on for 6 cycles, then trip the line in (b) and remove fault.
FLT9064-3PH	P1	3 phase fault on the G14-001-TAP (562476) to GEN-2014-001 (583850) 345 kV line CKT 1, near G14-001-TAP. a. Apply fault at the G14-001-TAP 345 kV bus. b. Clear fault after 6 cycles by tripping the faulted line. c. Wait 20 cycles, and then re-close the line in (b) back into the fault. d. Leave fault on for 6 cycles, then trip the line in (b) and remove fault.

FAULT ID	PLANNING EVENT	FAULT DESCRIPTIONS
FLT9065-3PH	P1	3 phase fault on the SUMNER 4 (532984) to GEN-2017-121 (761838) 138 kV line CKT 1, near SUMNER 4. a. Apply fault at the SUMNER 4 138 kV bus. b. Clear fault after 7 cycles by tripping the faulted line. c. Wait 20 cycles, and then re-close the line in (b) back into the fault. d. Leave fault on for 7 cycles, then trip the line in (b) and remove fault.
FLT9066-3PH	P1	3 phase fault on the WACO S 4 (533071) to WACO 4 (533072) 138 kV line CKT 1, near WACO S 4. a. Apply fault at the WACO S 4 138 kV bus. b. Clear fault after 7 cycles by tripping the faulted line. c. Wait 20 cycles, and then re-close the line in (b) back into the fault. d. Leave fault on for 7 cycles, then trip the line in (b) and remove fault.
FLT9067-3PH	P1	3 phase fault on the BUFFALO7 (532782) to GEN-2016-073 (587500) 345 kV line CKT 1, near BUFFALO7. a. Apply fault at the BUFFALO7 345 kV bus. b. Clear fault after 6 cycles by tripping the faulted line. c. Wait 20 cycles, and then re-close the line in (b) back into the fault. d. Leave fault on for 6 cycles, then trip the line in (b) and remove fault.
FLT1004-SLG	P4	Apply single-phase fault at VIOLA 4 on the 138kV bus after 16 cycles a. Trip the VIOLA 4 to CLEARWT4 Transmission Line Ckt 1 b. Trip the VIOLA 4 to GILL 4 Transmission Line Ckt 1
FLT1010-SLG	P4	Apply single-phase fault at VIOLA 4 on the 138kV bus after 16 cycles a. Trip the VIOLA 4 138/345/13.8kV Transformer Ckt 1 b. Trip the VIOLA 4 to SUMNER 4 Transmission Line Ckt 1
FLT1011-SLG	P4	Apply single-phase fault at VIOLA 4 on the 138kV bus after 16 cycles a. Trip the VIOLA 4 138/345/13.8kV Transformer Ckt 1 b. Trip the VIOLA 4 to MILAN_GOAB Transmission Line Ckt 1

RESULTS

Table 6-2 shows the relevant results of the fault events simulated for each of the modified cases. Existing DISIS base case issues are documented separately in Appendix D. The associated stability plots are also provided in Appendix D.

Table 0-1: GEN-2016-153 and GEN-2017-086 Dynamic Stability Results

FAULT ID	25SP			25WP		
	VOLT VIOLATION	VOLT RECOVERY	STABLE	VOLT VIOLATION	VOLT RECOVERY	STABLE
FLT9001-3PH	Pass	Pass	Stable	Pass	Pass	Stable
FLT9002-3PH	Pass	Pass	Stable	Pass	Pass	Stable
FLT9003-3PH	Pass	Pass	Stable	Pass	Pass	Stable
FLT9004-3PH	Pass	Pass	Stable	Pass	Pass	Stable

FAULT ID	25SP			25WP		
	VOLT VIOLATION	VOLT RECOVERY	STABLE	VOLT VIOLATION	VOLT RECOVERY	STABLE
FLT9005-3PH	Pass	Pass	Stable	Pass	Pass	Stable
FLT9006-3PH	Pass	Pass	Stable	Pass	Pass	Stable
FLT9007-3PH	Pass	Pass	Stable	Pass	Pass	Stable
FLT9008-3PH	Pass	Pass	Stable	Pass	Pass	Stable
FLT9009-3PH	Pass	Pass	Stable	Pass	Pass	Stable
FLT9010-3PH	Pass	Pass	Stable	Pass	Pass	Stable
FLT9011-3PH	Pass	Pass	Stable	Pass	Pass	Stable
FLT9012-3PH	Pass	Pass	Stable	Pass	Pass	Stable
FLT9013-3PH	Pass	Pass	Stable	Pass	Pass	Stable
FLT9014-3PH	Pass	Pass	Stable	Pass	Pass	Stable
FLT9015-3PH	Pass	Pass	Stable	Pass	Pass	Stable
FLT9016-3PH	Pass	Pass	Stable	Pass	Pass	Stable
FLT9017-3PH	Pass	Pass	Stable	Pass	Pass	Stable
FLT9018-3PH	Pass	Pass	Stable	Pass	Pass	Stable
FLT9019-3PH	Pass	Pass	Stable	Pass	Pass	Stable
FLT9020-3PH	Pass	Pass	Stable	Pass	Pass	Stable
FLT9021-3PH	Pass	Pass	Stable	Pass	Pass	Stable
FLT9022-3PH	Pass	Pass	Stable	Pass	Pass	Stable
FLT9023-3PH	Pass	Pass	Stable	Pass	Pass	Stable
FLT9024-3PH	Pass	Pass	Stable	Pass	Pass	Stable
FLT9025-3PH	Pass	Pass	Stable	Pass	Pass	Stable
FLT9026-3PH	Pass	Pass	Stable	Pass	Pass	Stable
FLT9027-3PH	Pass	Pass	Stable	Pass	Pass	Stable
FLT9028-3PH	Pass	Pass	Stable	Pass	Pass	Stable
FLT9029-3PH	Pass	Pass	Stable	Pass	Pass	Stable
FLT9030-3PH	Pass	Pass	Stable	Pass	Pass	Stable
FLT9031-3PH	Pass	Pass	Stable	Pass	Pass	Stable

FAULT ID	25SP			25WP		
	VOLT VIOLATION	VOLT RECOVERY	STABLE	VOLT VIOLATION	VOLT RECOVERY	STABLE
FLT9032-3PH	Pass	Pass	Stable	Pass	Pass	Stable
FLT9033-3PH	Pass	Pass	Stable	Pass	Pass	Stable
FLT9034-3PH	Pass	Pass	Stable	Pass	Pass	Stable
FLT9035-3PH	Pass	Pass	Stable	Pass	Pass	Stable
FLT9036-3PH	Pass	Pass	Stable	Pass	Pass	Stable
FLT9037-3PH	Pass	Pass	Stable	Pass	Pass	Stable
FLT9038-3PH	Pass	Pass	Stable	Pass	Pass	Stable
FLT9039-3PH	Pass	Pass	Stable	Pass	Pass	Stable
FLT9040-3PH	Pass	Pass	Stable	Pass	Pass	Stable
FLT9041-3PH	Pass	Pass	Stable	Pass	Pass	Stable
FLT9042-3PH	Pass	Pass	Stable	Pass	Pass	Stable
FLT9043-3PH	Pass	Pass	Stable	Pass	Pass	Stable
FLT9044-3PH	Pass	Pass	Stable	Pass	Pass	Stable
FLT9045-3PH	Pass	Pass	Stable	Pass	Pass	Stable
FLT9046-3PH	Pass	Pass	Stable	Pass	Pass	Stable
FLT9047-3PH	Pass	Pass	Stable	Pass	Pass	Stable
FLT9048-3PH	Pass	Pass	Stable	Pass	Pass	Stable
FLT9049-3PH	Pass	Pass	Stable	Pass	Pass	Stable
FLT9050-3PH	Pass	Pass	Stable	Pass	Pass	Stable
FLT9051-3PH	Pass	Pass	Stable	Pass	Pass	Stable
FLT9053-3PH	Pass	Pass	Stable	Pass	Pass	Stable
FLT9054-3PH	Pass	Pass	Stable	Pass	Pass	Stable
FLT9055-3PH	Pass	Pass	Stable	Pass	Pass	Stable
FLT9056-3PH	Pass	Pass	Stable	Pass	Pass	Stable
FLT9057-3PH	Pass	Pass	Stable	Pass	Pass	Stable
FLT9058-3PH	Pass	Pass	Stable	Pass	Pass	Stable
FLT9059-3PH	Pass	Pass	Stable	Pass	Pass	Stable

FAULT ID	25SP			25WP		
	VOLT VIOLATION	VOLT RECOVERY	STABLE	VOLT VIOLATION	VOLT RECOVERY	STABLE
FLT9060-3PH	Pass	Pass	Stable	Pass	Pass	Stable
FLT9061-3PH	Pass	Pass	Stable	Pass	Pass	Stable
FLT9062-3PH	Pass	Pass	Stable	Pass	Pass	Stable
FLT9063-3PH	Pass	Pass	Stable	Pass	Pass	Stable
FLT9064-3PH	Pass	Pass	Stable	Pass	Pass	Stable
FLT9065-3PH	Pass	Pass	Stable	Pass	Pass	Stable
FLT9066-3PH	Pass	Pass	Stable	Pass	Pass	Stable
FLT9067-3PH	Pass	Pass	Stable	Pass	Pass	Stable

The results of the dynamic stability analysis showed that there were several existing base case issues found in the original DISIS-2017-002 case and the case with the GEN-2016-153 and GEN-2017-086 modification. These issues were not attributed to the GEN-2016-153 and GEN-2017-086 modification request and detailed in Appendix D.

There were no damping or voltage recovery violations attributed to the GEN-2016-153 and GEN-2017-086 modification request observed during the simulated faults. Additionally, the project was found to stay connected during the contingencies that were studied and, therefore, will meet the Low Voltage Ride Through (LVRT) requirements of FERC Order #661A.

MODIFIED CAPACITY EXCEEDS GIA CAPACITY

Under FERC Order 845, Interconnection Customers are allowed to request Interconnection Service that is lower than the full generating capacity of their planned generating facilities. The Interconnection Customers must install acceptable control and protection devices that prevent the injection above their requested Interconnection Service amount measured at the POI.

As such, Interconnection Customers are allowed to increase the generating capacity of a generating facility without increasing its Interconnection Service amount stated in its GIA. This is allowable as long as they install the proper control and protection devices, and the requested modification is not determined to be a Material Modification.

RESULTS

The modified generating capacity of both GEN-2016-153 (135 MW) and GEN-2017-086 (153 MW) exceed the respective GIA Interconnection Service amounts, 134 MW and 150 MW respectively, as listed in Appendix A of its GIA.

The customer must install monitoring and control equipment as needed to ensure that the amount of power injected at the POI from each request does not exceed the Interconnection Service amount listed in each GIA.

MATERIAL MODIFICATION DETERMINATION

In accordance with Attachment V of SPP's Open Access Transmission Tariff, for modifications other than those specifically permitted by Attachment V, SPP shall evaluate the proposed modifications prior to making them and inform the Interconnection Customer in writing of whether the modifications would constitute a Material Modification. Material Modification shall mean (1) modification to an Interconnection Request in the queue that has a material adverse impact on the cost or timing of any other Interconnection Request with a later Queue priority date; or (2) planned modification to an Existing Generating Facility that is undergoing evaluation for a Generating Facility Modification or Generating Facility Replacement, and has a material adverse impact on the Transmission System with respect to: i) steady-state thermal or voltage limits, ii) dynamic system stability and response, or iii) short-circuit capability limit; compared to the impacts of the Existing Generating Facility prior to the modification or replacement.

RESULTS

SPP determined the requested modification is **not a Material Modification** based on the results of this Modification Request Impact Study performed by SPP. SPP evaluated the impact of the requested modification on the prior study results. SPP determined that the requested modification did not negatively impact the prior study dynamic stability and short circuit results, and the modifications to the project were not enough to change the previously studied powerflow conclusions.

This determination implies that any network upgrades already required by GEN-2016-153 and GEN-2017-086 would not be negatively impacted and that no new upgrades are required due to the requested modification, thus not resulting in a material adverse impact on the cost or timing of any other Interconnection Request with a later Queue priority date.